# PH 3½-3 Glass Pendant

**Project name:**

**Project type:**

**Notes:**

## Light distribution diagrams

Cartesian

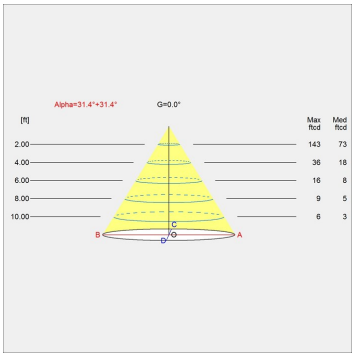


Isolux

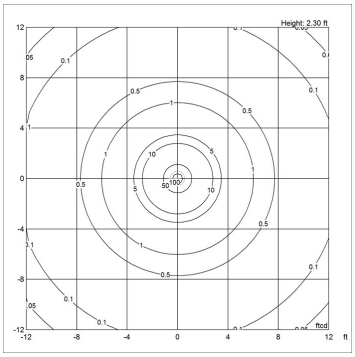


Polar

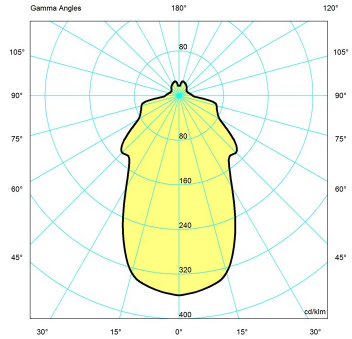


Bug

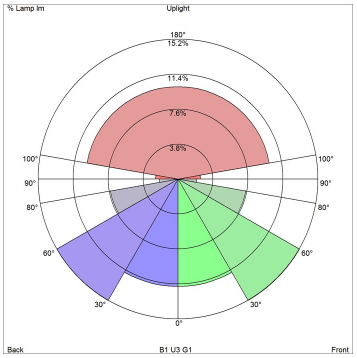


## Variant options

| Light source | Voltage frequency | Color | Cable type |
|---|---|---|---|
| 1/15W LED/A-19/medium | 120V | Black metalized | BLK |
| 15W LED/W LEK | | Brass metalized | WHITE TEXTILE |
| | | High lustre chrome plated | |
| | | | |

louis poulsen

© Louis Poulsen 2019

## Design
Poul Henningsen

## Finish
Black metalized, Brass metalized, High lustre chrome plated

## Weight
Min: 4.949 lbs Max: 4.949 lbs

## Voltage
120V



© Louis Poulsen 2019