Aqua-FIT®
TAG _____

Z6951-XL

Aqua-FIT® Battery Powered Faucet

ADA DESIGNED

XL LEAD FREE

Patented and Patent Pending

Flow Control Options

- ☐ **-E*** 1.5 gpm/ 5.7 Lpm Vandal-Resistant Aerator
- ☐ **-F** 0.5 gpm/1.9 Lpm Vandal-Resistant Non-Aerated
- ☐ **-J** * 1.5 gpm/ 5.7 Lpm Vandal-Resistant Laminar Flow
- ☐ **-K*** 1.0 gpm/ 3.8 Lpm Vandal-Resistant Laminar Flow
- ☐ **-L*** 1.0 gpm/ 3.8 Lpm Vandal-Resistant Aerator
- ☐ **-M** 0.35 gpm/1.3 Lpm Vandal-Resistant Non-Aerated
- ☐ **-N** 0.5 gpm/ 1.9 Lpm Vandal-Resistant Laminar Flow

Power Supply Choices (Sold Separately)

- ☐ **-ACA** 6 VDC Plug-In Power Converter
- ☐ **-HW6** Hardwired Power Converter
- ☐ **-LL** "10 Year Battery" - Long Life

Optional Power Supply Accessories

- ☐ **-CWB** Connector Wire for Hardwire Install
- ☐ **-MJ** Mini Junction Box

NOTE: For Hardwire applications furnish P6000-HW6 power converter. Order P6000-HW6 power converter seperately.
The P6000-HW6 and P6000-MJ will power up to 8 sensor faucets.

Architectural/Engineering Approval

The information contained in this document is subject to change without notice.
Please contact Zurn for most up to date information.

ZURN INDUSTRIES, LLC. ♦ COMMERCIAL BRASS OPERATION
5900 ELWIN BUCHANAN DRIVE ♦ SANFORD NC 27330
PHONE: 1-800-997-3876 ♦ FAX: 919-775-3541
WWW.ZURN.COM
IN CANADA: ZURN INDUSTRIES LIMITED
7900 GOREWAY DRIVE UNIT 10 ♦ BRAMPTON, ONTARIO L6T5W6
PHONE: 905-405-8272 FAX: 905-405-1292

Engineering Specification

ADA compliant, battery powered, chrome plated sensor faucet for retrofit and new construction.

- Customizable Settings
  - Time-out
  - Line Purge
  - Sensor Range
  - Metering Mode
- Occupant Detection
  - Infrared convergence-type proximity sensor
  - Thirty Second Time out feature
- Spout module
  - Chrome Plated Zinc
- Also Includes
  - In-line filter
  - 4 "AA" batteries
  - Inlet for a 1/2"[13] ball riser

Accessories

- ☐ **-5S** 5 sec. Timeout
- ☐ **-10S** 10 sec. Timeout
- ☐ **-15S** 15 sec. Timeout
- ☐ **-60S** 60 sec. Timeout
- ☐ **-ADM** Above Deck Mixer
- ☐ **-CP4** Cover Plate 4"[102] Centers
- ☐ **-CP8** Cover Plate 8"[203] Centers
- ☐ **-H4** Wrist Blade Handle for ADM
- ☐ **-LP12** Line Purge 2 min/12 hr
- ☐ **-LP24** Line Purge 2 min/24 hr
- ☐ **-LP48** Line Purge 2 min/48 hr
- ☐ **-MT** Mixing Tee
- ☐ **-MV** Temperature Mixing Valve
- ☐ **-SH** Supply Hoses for Mixing Valve
- ☐ **-SSH** Single Supply Hose
- ☐ **-TMV** Thermostatic Mixing Valve for Multiple Faucets
- ☐ **-TMV-1** Thermostatic Mixing Valve for Single Faucets
- ☐ **-_____** Other

WaterSense Meets EPA Criteria Certified by IAPMO R&T

*This product should be used with a WaterSense labeled counterpart with a compatible flush volume to ensure that the entire system meets the requirements for water efficiency and performance.

Zurn Lead Free products (-XL) is the line of durable, high quality brass faucets and fixtures that are designed and manufactured to comply with Section 1417 of the Safe Drinking Water Act (SDWA) which mandates the weighted average lead content of no more than 0.25% of the wetted surface.

Aqua-FIT® is a trademark of Zurn Industries, LLC.

TYPICAL Z6951-XL

AquaSense Battery Powered Faucet

NOTE: Recommended through hole diameter to properly mount the spout/ shank is 1-1/8" to 1-1/4".

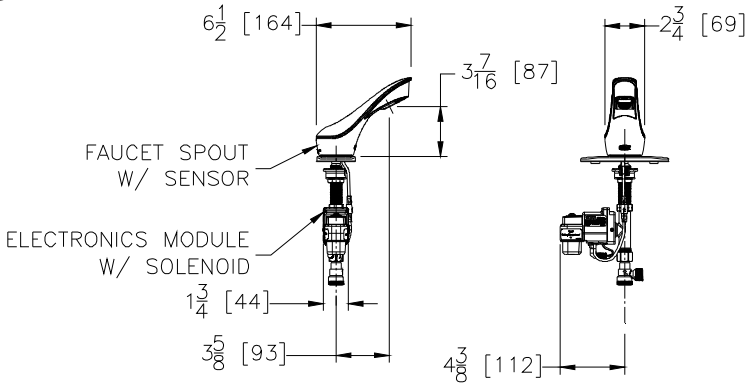

Optional Mixing Valves

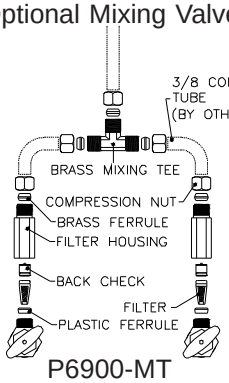

P6900-MT
Mixing Tee

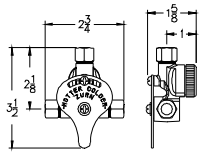

P6900-MV
Temperature Mixing Valve

TYPICAL Z6951-XL-ACA

AquaSense Plug-In Powered Faucet

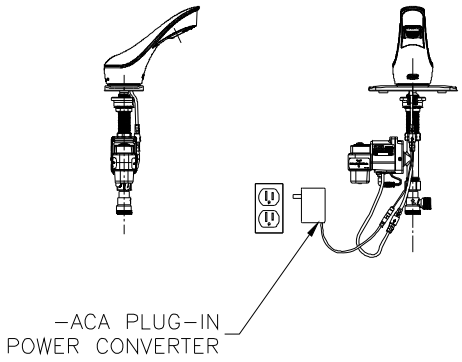

TYPICAL Z6951-XL-CWB

AquaSense Hardwire

Powered Faucet

Optional:
* Optional -MJ mini junction box for connecting up to 8 faucets

NOTE: MUST USE EITHER ZURN P6000-HW6 HARDWIRE POWER CONVERTER OR ZURN P6000-ACA PLUG-IN POWER CONVERTER TO ENSURE PROPER OPERATION. USING A POWER CONVERTER OTHER THAN ZURN MAY RESULT IN OPERATION MALFUNCTION OR UNIT FAILURE.

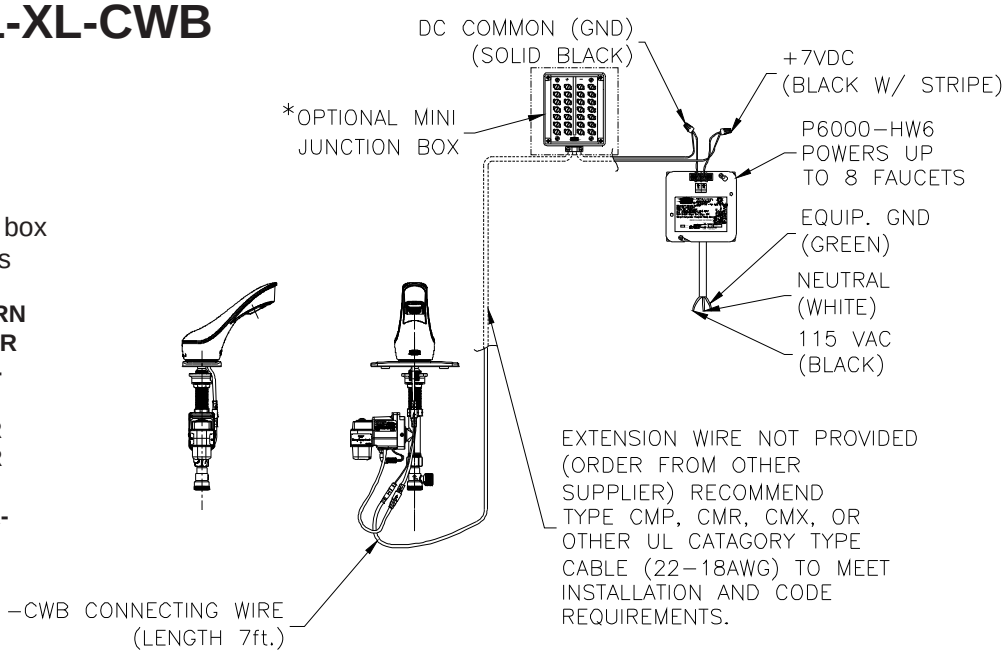

Aqua-FIT® is a trademark of Zurn Industries, LLC.